RESEARCH TOOLS AND EQUIPMENT TECHNICAL SPECIFICATIONS

LOT 1		
No	**Item name and Technical Specifications**	**Manufacturer's/Supplier's Response**
1	**Online power monitoring device – 2pc**	
	Power in put: 240V AC from voltage sensors	
	Voltage sensors: one lead for each phase plus neutral with appropriate clamps for tapping the voltages; colour-coded/labelled appropriately	
	Voltage range: 0 to 500 Vac	
	Current sensor circuits: up to 6 circuits	
	Current sensors: a set of flex sensors for each of the 6 circuits; color-coded/labeled appropriately	
	Communication: WIFI or/and Bluetooth for configuration at site; GSM for remote data monitoring	
2	**Power Quality Analyzer- 1pc**	
	See attached KP1-6C-4-1-TSP-09-108-2-SPECIFICATION FOR POWER QUALITY ANALYZER - PART 2 - FOR ONLINE USE	
LOT 2		
No (3)	**Item name and Technical Specifications**	**Manufacturer's/Supplier's Response**
I.	**Microcontroller – 20 pcs**	
	1. Input voltage of 4.5V to 10V DC 2. Internal 3.3V voltage regulator 3. Internal Wi-Fi capability 4. Micro USB connector port supporting power & programming 5. USB to serial chip type CP2102 6. Minimum of 11 digital I/O pins and 1 analog in pin 7. I/O pins rating of 3.3V and 40mA 8. Power consumption less than 500mA 9. Operating temperature range of 0 to 85 degrees Celsius 10. Minimum of 1 analogue to digital converter port	

	11. Maximum dimensions of 50mm long by 27mm wide 12. GPIO pins soldered on 13. Should be programmable via a laptop/computer using a USB port 14. Support for MQTT protocol 15. Support for C, C++ or python programming languages 16. SRAM of at least 64KB 17. Flash memory of at least 4MB 18. Supplied with compatible power supply adapter rated at 240V AC input voltage	
II.	**Router – 2 pcs**	
	1. Built-in SIM card slot 2. 4G LTE compatible 3. Internet access via 4G LTE 4. Open to SIM cards from various internet service providers 5. Built-in WIFI capability 6. Minimum of 4 Ethernet ports 7. Internal standby battery 8. External antennas 9. Maximum dimensions of 20 cm long, 15cm wide and 5cm deep. 10. Supplied with compatible power supply adapter rated at 240V AC input voltage	
III.	**MIFI devices – 20 pcs**	
	1. Built-in SIM card slot 2. 4G LTE compatible 3. Internet access via 4G LTE 4. Open to SIM cards from various internet service providers 5. Built-in WIFI capability 6. Internal standby battery 7. Provision for external antenna connection 8. Supports connection of minimum 10 devices on WIFI 9. Maximum dimensions of 7 cm long, 5cm wide and 3cm depth. 10. Operating temperature range of 0 to 50 degrees Celsius 11. Supplied with compatible power supply adapter rated at 240V AC input voltage	
IV.	**expansion board terminal adapter – 20 pcs**	
	1. Provides push in slots for plugging in ESP8266 based microcontrollers	

	2. Provides screw type terminal adapters connected to the push in slots 3. Compatible with ESP8266-12E and above	
V.	**5V 4-channel relay modules – 20 pcs**	
	1. Relay coil pickup rated at 5V DC and less than 200mA 2. opt-coupled input with trigger current less than 6mA 3. Provides separate relay coil VCC and input trigger VCC 4. Low trigger voltage of 0-1.5V and high trigger voltage of 2.5V-5V 5. Output contacts rating of 10A at 30V DC or 240V AC 6. At least 4 channel integrated relay system 7. Minimum of 1NO & 1NC contacts 8. Output contacts connected to Screw type terminal adapters	
VI.	**5V DC Regulated power supplies – 20 pcs**	
	1. Input voltage rating of 240V AC 2. Output voltage rating of regulated 5V DC 3. Minimum output current of 1A 4. Barrel type end connector 5. Input pins conform to British standard socket	
VII.	**LPS8 Indoor LoRaWAN gateway – 1pc**	
	It includes an SX1308 LoRa concentrator, which provides 10 programmable parallel demodulation paths. LPS8 has pre-configured standard LoRaWAN frequency bands to use for different countries. Users can also customize the frequency bands to use in their own LoRa network. The gateway has an antenna to receive the LoRa Packets in 8-channels. On the front side, it has a USB Type C port for Input Power of DC 5V,2A. Apart from the power, it also has an Ethernet port, USB Host Port & a Toggle button to reset the gateway. **Support Frequency of 433,868 & 915mHz is a must.** **Because Kenyan accepted frequencies 433 & 868**	
VIII.	**Ra-07/Ra-07H Module – 2pcs**	
	Ai-Thinker Ra-07/Ra-07H module is a LoRaWAN module that supports long-distance communication, ultra-low	

	power consumption, high sensitivity, and high-cost performance. The chip ASR6501 of the module integrates a LoRa radio transceiver, a LoRa modem, and a 32-bit RISC MCU. MCU uses ARM Cortex M0 + core, the operating frequency is 48MHz. The operating frequency range of ASR6501 can support continuous coverage from 150MHz to 960MHz. It supports LoRa modulation and (G)FSK modulation. **Features** •With super anti-interference ability, it can work normally in a complex interference environment. •Minimum receiving sensitivity: -137dBm (SF=12/BW=125KHz) •Maximum transmit power +21dBm •Working frequency: (Ra-07) 410mhz ~ 525mhz (default), (Ra-07h) 803mhz ~ 930mhz (default) •Power supply voltage input: 3.3V •Transmitting working current: 107mA (full load power consumption) •Receive working current: 6mA •Sleep current: 3uA	
IX.	**Ra-07 Based Maduino Zero LoRaWAN Board – 2pcs**	
	The **Maduino Zero LoRaWan** Board is a solution based on the ATSAMD21G18 microcontroller and LoRaWAN module Ra-07H. The Maduino LoRaWan acts as a LoRaWAN node to transmit/receive the local data to the network by connecting LoRaWAN Gateway. With this module, you can prototype LoRaWAN projects easily in a few hours. **Specifications** •LoRaWAN Protocol Class A/B/C •ATSAMD21G18, 32-Bit ARM Cortex M0+ •Interface: I2C/SPI/UART/18*GPIO •With super anti-interference ability, it can work normally in complex interference environments. •Minimum Receiving Sensitivity: -137dBm (SF=12/BW=125KHz) •Maximum Transmit Power +21dBm	

	•Working Frequency: (Ra-07) 410mhz ~ 525mhz, (Ra-07h) 868mhz (default) •Power Supply Voltage of the Board: 3.6V~5V(normally 5V) •Power Supply Voltage of the Module/MCU: normally 3.3V •Transmitting Working Current: 107mA (full load power consumption) •Receive Working Current: 6mA •Sleep Current: 3uA •LDO: AP7361 •Charger: MCP73831	
X.	**USB-to-UART Converter – 2pcs**	
	• Usage/Application- Computer or laptop • Storage Temperature- 25 to 85 Deg C • Number Of Ports- 1 • Communication Indicator Type-USB type A • Operation Voltage- 230 V AC	
XI.	**LoRa Module SX1278 (from Ai-Thinker) – 5pcs**	
	• +20 dBm - 100 mW constant RF output vs. V supply • +14 dBm high efficiency PA • Programmable bit rate up to 300 kbps • High sensitivity: down to -148 dBm • Bullet-proof front end: IIP3 = -11 dBm • Excellent blocking immunity • Low RX current of 9.9 mA, 200 nA register retention • Fully integrated synthesizer with a resolution of 61 Hz • FSK, GFSK, MSK, GMSK, LoRa™ and OOK modulation	
XII.	**3.7V, 1000mAH Lithium-Ion Battery – 5pcs**	
	Nominal Voltage: 3.7V Nominal Capacity: 1000mAh Max Charge Current: 1000mA (1C) Max Discharge Current: 1000mA (1C)	
XIII.	**TP4056 Battery charging Module – 2pcs**	
	• Programmable Charge Current Up to 1000mA • No MOSFET, Sense Resistor or Blocking Diode Required • Complete Linear Charger in SOP-8 Package for Single Cell Lithium-Ion Batteries • Constant-Current/Constant-Voltage • Charges Single Cell Li-Ion Batteries Directly	

<table>
<tr><td></td><td>from USB Port
• Preset 4.2V Charge Voltage with 1.5% Accuracy
• Automatic Recharge
• two Charge Status Output Pins
• C/10 Charge Termination
• 2.9V Trickle Charge Threshold (TP4056)</td><td></td></tr>
<tr><td rowspan="2">XIV.</td><td>Solar Panel (Small for Arduino) – 2pcs</td><td rowspan="2"></td></tr>
<tr><td>• Maximum power (Pmax): 300Mw
• Open circuit voltage (OCV): 5.7V
• Maximum power point voltage (Vmpp): 4.5V
• Short circuit current (Isc): 74mA
• Maximum power point current (Impp): 65mA.</td></tr>
<tr><td rowspan="2">XV.</td><td>ESP32 Wifi Module. – 3pcs</td><td rowspan="2"></td></tr>
<tr><td>• Single or Dual-Core 32-bit LX6 Microprocessor with clock frequency up to 240 MHz.
• 520 KB of SRAM, 448 KB of ROM and 16 KB of RTC SRAM.
• Supports 802.11 b/g/n Wi-Fi connectivity with speeds up to 150 Mbps.
• Support for both Classic Bluetooth v4.2 and BLE specifications.
• 34 Programmable GPIOs.
• Up to 18 channels of 12-bit SAR ADC and 2 channels of 8-bit DAC
• Serial Connectivity include 4 x SPI, 2 x I^2C, 2 x I^2S, 3 x UART.
• Ethernet MAC for physical LAN Communication (requires external PHY).
• 1 Host controller for SD/SDIO/MMC and 1 Slave controller for SDIO/SPI.
• Motor PWM and up to 16-channels of LED PWM.
• Secure Boot and Flash Encryption.</td></tr>
<tr><td rowspan="2">XVI.</td><td>Arduino Pro Mini 3.3V, 8MHz – 2pcs</td><td rowspan="2"></td></tr>
<tr><td><table>
<tr><td>Microcontroller</td><td>ATmega328P</td></tr>
<tr><td>Board Power supply</td><td>3.35 -12 V (3.3V model)</td></tr>
<tr><td>Circuit Operating Voltage</td><td>3.3V</td></tr>
<tr><td>Digital I/O Pins</td><td>14</td></tr>
</table></td></tr>
</table>

	<table><tr><td>PWM Pins</td><td>6</td></tr><tr><td>UART</td><td>1</td></tr><tr><td>SPI</td><td>1</td></tr><tr><td>I2C</td><td>1</td></tr><tr><td>Analog Input Pins</td><td>6</td></tr><tr><td>External Interrupts</td><td>2</td></tr><tr><td>DC Current per I/O Pin</td><td>40 mA</td></tr><tr><td>Flash Memory</td><td>32KB of which 2 KB used by bootloader</td></tr><tr><td>SRAM</td><td>2 KB</td></tr><tr><td>EEPROM</td><td>1 KB</td></tr><tr><td>Clock Speed</td><td>8 MHz</td></tr></table>	
XVII.	**BH1750 Light Sensor – 2pcs** • Power Supply: 2.4V-3.6V (typically 3.0V) • current consumption: 0.12mA • Measuring Range: 1-65535lx • Communication: I2C bus • Accuracy: +/-20% • Built in A/D converter for converting analog illuminance in the digital data.	
XVIII.	**BME280 Sensor – 2pcs** • Temperature: -40 to 85°C. • Humidity: 0 to 100% • Pressure: 300 to 1100 hPa. • Altitude: 0 to 30,000 ft. • I2C and SPI Interface. • 3.3V operation	
XIX.	**Jumper Wires – 3 packets (male-male, male – female and female-female)**	
XX.	**BreadBoard – 5pcs**	
XXI.	**37 Sensors Assortment Kit 37 Sensors Kit Sensor Starter Kit for Arduino Raspberry pi Sensor kit 37 37 Sensors**	

XXII.	**LoRa ESP32 Gateway Shield – 2pcs**	
XXIII.	**MakePython ESP32 Board**	
XXIV.	**FTDI Module – 2pcs**	
	TIELONG FT232RL FTDI USB 3.3V 5.5V to TTL Serial Adapter Module for Arduino FT232 Mini Port	
XXV.	**Micro Tracker**	
	• Multi-mode tracker with embedded sensors combining GPS, Low-power GPS, Wi-Fi Sniffer, BLE and LoRaWAN	
XXVI.	**Accelerometer and Gyroscope – 2pcs**	
	• 3 Axis Analog Gyro Sensors • 3 Axis Accelerometer	
XXVII.	**Soldering wire - 1 Roll**	
XXVIII.	**Electronics Soldering Iron Kit**	
	• 80W Electric Soldering Iron Kit Set • Digital Temperature Adjustable Welding Tool • Solder Tin With Iron Tips Repair Tools	
XXIX.	**PCB Board – 10pcs** 9x15 8x12 7x9 6x8 5x7 4x6 3x7 2x8 cm Double Side Prototype Diy Universal Printed Circuit PCB Board Protoboard For Arduino	
XXX.	**Smart meters- Single phase- 5pcs;**	
	See attached specifications - KP1-13D-4-1-TSP-14-11-05-SPECIFICATION FOR SINGLE-PHASE WATT-HOUR SMART METER WITH SELECTABLE PRE-PAID & POST-PAID MODES **Also check additional information on " Technical Specifications for Smart Energy Meters connectivity via Power Line Fiber" below**	
XXXI.	**Smart meters- three (3) phase- 5pcs**	
	See attached specifications- KP1-13D-4-1-TSP-14-11-04-SPECIFICATION FOR THREE-PHASE WATT-HOUR SMART METER WITH SELECTABLE PRE-PAID & POST-PAID MODES	

	Also check additional information on " Technical Specifications for Smart Energy Meters connectivity via Power Line Fiber" below	
XXXII.	**Concentrator- 2 pcs**	
	Check under " Technical Specifications for Smart Energy Meters connectivity via Power Line Fiber" below; No. 3.0 Concentrator Specifications	
XXXIII.	**Meter Boxes – 10 pcs**	
	(LXWXH)- 43cmX43X17cm	
	LOT 3	
No	**Item name and Technical Specifications**	**Manufacturer's/Supplier's Response**
4	**Laptop – 6pcs**	
	• 11th Generation Intel Core i7 Processor • Graphics Intel Iris Xe • Memory 16GB DDR4 RAM • Hard Drive 512GB PCIe M.2 SSD • Display 14 or15 inch • Integrated Intel Iris Xe Graphics • USB 3.1 Gen 2 & 1 | HDMI 1.4b • Mandatory: Ethernet Port(RJ45) • Wi-Fi 5 • Bluetooth 5.0 • Gigabit Ethernet Port • 720p HD Webcam, Mics, and 2W Speakers • 1 Year Manufacturer's Warranty • Operating system: Windows 11 (64Bit)	
5	**External Hard disks – 6pcs**	
	• Connection Interface - USB 3.1 Gen 1 • USB Interface- Micro USB to USB Type A • Storage Capacity - 4TB • Operating Temperature - 5°C to 55°C • Operating Voltage - 5V • Warranty - Three-year Limited Warranty • Supported Operating System: Microsoft Windows 7 Microsoft Windows 8 Microsoft Windows 10 Microsoft Windows 11	

	Mac OS X 10.7 or later Linux Kernel 2.6.31 or later	

LOT 4

No	Item name and Technical Specifications	Manufacturer's/Supplier's Response
6	**LabView and associated accessories**	

Feature	Technical Specification
Product Name	Laboratory Virtual Instrument Engineering Workbench LabVIEW Software
Developer	National Instruments Corp.
Software Version	LabVIEW 2022
Included Edition	LabVIEW Full
Checksum Supported	• MD5 • SHA256
Language	English
Supported Operating Systems	• Microsoft Windows Server® LTSC with Hyper-V • Microsoft Windows Server 2022 64-bit • Microsoft Windows Server 2019 64-bit • Microsoft Windows Server 2016 64-bit • Microsoft Windows 11 • Microsoft Windows 10 64-bit • Mac OS • Red Hat® Enterprise Linux • Oracle® Linux • SUSE® Linux Enterprise Server • VMware® ESXi • Canonical® Ubuntu® Server LTS
Application Bitness	• 64-bit • 32-bit
Base System Requirements Supported	
Windows	
Runtime-Time Engine:	Processor: • Pentium 4M/Celeron 866 MHz (or equivalent) or later (32-bit) • Pentium 4 G1 (or equivalent) or later (64-bit) RAM: 256MB Screen Resolution: 1024 x 768 pixels Disk Space: 620MB Operating System: • Windows 10/8.1/8/7 SP1 (32- and 64-bit) • Windows Server 2012 R2 (64-bit)

		• Windows Server 2008 R2 SP1 (64-bit)	
	Linux		
	Run-Time Engine:	Processor: Pentium 4 G1 (or equivalent) or later RAM: 256MB Screen Resolution: 1024 x 768 pixels Disk Space: 108 MB (32-bit) 98MB (64-bit) Operating System: Linux kernel 2.6x or 3.x and GNU C Library (glibc) Version 2.11 for the Intel x86_64 architecture (64-bit)	
	Mac OS X		
	Run-Time Engine	Processor: Intel-based processor RAM: 256MB Screen Resolution: 1024 x 768 pixels Disk Space: 257MB Operating System: OS X 10.11 or 10.12	
	Key Features	• Acquire data from NI and third-party hardware and communicate using industry protocols. • Create interactive UIs for test monitoring and control. • Utilize standard math, probability, and statistical functions. • Integrate code written in Python, C/C++, .NET, and MathWorks MATLAB® software. • Save data to .csv, .tdms, or any custom-defined binary file • Advanced analysis algorithms for curve fitting, differential equations, linear algebra, and more. • Signal processing functions for signal measurement, filtering, conditioning, and more. • Signal generation, operations, and control functions with PID and fuzzy logic. • Available analysis functions • Configurable, interactive display elements • Drivers for automating every instrument and data acquisition hardware. • Connectivity to other languages and industry-standard protocols.	

	Additional Features	• Acquire Data and Control Instruments • Monitor and Interact with a Test Environment • Communicate Using Industry Protocols • Develop with Graphical Programming • Gain Insights from Data • Add Code from Other Programming Languages • Build High-Speed Measurement and Control Systems with FPGAs. • Access Test System Remotely • Automate a Sequence of Tests
	Driver Software Included	Yes
	License Type	Perpetual Volume License
	Number of Concurrent Users Supported	At Least 10
	Warranty	3 Years including online support
	DAQ accessory to be supplied	NI Multi-function Data Acquisition Card USB-6002 DAQ
	Terminal Block to be supplied with male or female connector	25-pin Terminal Blocks for DAQ boards with 25-pin D-sub
7	**Industrial PLC Kits**	
	Programmable Logic Controller	
	• Starter-Kit 12/24RCE consists of:	
	• 12/24RCE	
	• Inrush current limiter	
	• SOFT Comfort V8	
	• Expansion Module (contains at least; 24 digital input, 20 digital outputs, 8 analog inputs and 8 analog outputs)	
	• Communication Module. (Ethernet Module)	
	• WinCC Basic	
	• Systainer	
	• Programming Software (compatible with PLC LOGO) licence for at least 3PC's	
	Programmable Logic Controller -Power supply	
	• Power supply rating 240 VAC, 50HZ to 24VDC 1.3A • Compatible with PLC LOGO	
	GSM Module for PLC	
	• Compatible with PLC • Compatible with Kenyan frequencies	
LOT 5		

No	Item name and Technical Specifications		Manufacturer's/Supplier's Response
8	**Hub Motor**		
	Voltage: 60V/72V Rated Power: 3000W Efficiency: At least 80% Design: Brushless Brake type: Disc Brake Max Speed: 120km/h		
9	**Motor Controller**		
	Voltage: 48V-72V Current Max: 100A Max Power:4000W		
10	**Dashboard**		
	Display size: At least 5 inch Display type: LCD (Colored) Displayed content: at least 6 functions and customizable Working Voltage:9V-32V(12V/24V) Working temperature: -30℃~+80℃ Water and dust proof: At least IP67		
11	**Charger**		
	AC input Voltage	AC 90～265V	
	Power rating	At least 1000W	
	DC Output voltage range	48-96V; Customizable	
	DC output current	Max 20A	
	Efficiency	At least 90%	
	Working temperature:	-30℃~+80℃	
	Standby power consumption	≤ 5W	

	Frequency	45-55Hz	
	Protection	Short Circuit; overcurrent; over/under voltage	
12	**Battery Management System (BMS)**		
	Discharge Current	Max 100A	
	Discharge Overcurrent protection	2 times continuous current	
	Charge Voltage	48-96V; customizable	
	Overvoltage charge protection	4.25+/-0.05V per cell	
	Balance Voltage	4.15V per cell	
	Voltage discharge protection	3+/-0.05V	
	Short Circuit Protection	yes	
	Temperature control protection	yes	
	Self-consumption	Less 0.5A	
	Working temperature	-30℃~+60℃	
13	**Lithium batteries**		
	Technology	Lithium Iron Phosphate($LiFePO_4$)	
	Nominal Voltage	72V	
	Nominal Capacity	30AH	
	Over discharge protection	56±1v	
	Over charge protection	84±0.5V	
	Charging current	≤10 A	
	Continuous discharge current	≤100A	
	Transient excess current	350±50A	
14	Accelerator		
	Type	Handle bar	
	Voltage	48/60/72/84/96	

	Speed Control	3 speed, full twist control	
	Ingress protection	IP67	
	Material	ABS	
15	LED headlights		
	Type	LED	
	Voltage	12-60V	
	Watts	60W max	
	Range	Parking light, Dim, High beam	
	Ingress protection	IP67	
	Working life	Min 20000 hours	

Technical Specifications for Smart Energy Meters connectivity via Power Line Fiber

1.0 Overview

The Smart Energy Meters (SEM) are designed to measure energy consumption and facilitate data communication with a central Concentrator through Power Line Communication (PLC) or LORA communication. The Concentrator communicates with a backend server via passive fiber on the power line using GPON technology. The Smart Energy Meters are managed via an online platform that can integrate with existing CRM and ERP systems.

2.0 General Specifications

2.1. Measurement and Accuracy

- Compliant with IEC 62053-21 and IEC 62053-23 for accuracy class 1 or class 0.5
- Active and reactive energy measurement for single and three-phase connections
- Real-time monitoring of voltage, current, power factor, and frequency
- Tamper detection and logging

2.2. Communication Interfaces

- Power Line Communication (PLC) compliant with PRIME or G3-PLC specifications
- LORA communication with configurable channels and spreading factors
- RS-485 port for local configuration and diagnostics

3.0 Concentrator Specifications

3.1. Communication with Smart Energy Meters

- Capable of managing a minimum of 500 Smart Energy Meters per Concentrator
- Support for PLC or LORA communication
- Automatic discovery and registration of Smart Energy Meters
- Secure data transmission using AES-128 encryption

3.2. Communication with Backend Server

- GPON technology for communication over passive fiber on the power line
- Support for standard OLT and ONT devices
- Compliant with ITU-T G.984 series recommendations
- Support for IPv4 and IPv6 addressing

4.0 Backend Server and Online Platform

4.1. Data Collection and Storage

- Collection of energy consumption and metering data from Concentrators
- Secure storage and backup of metering data
- Data aggregation and analytics

4.2. Integration with CRM and ERP Systems

- API support for integration with existing CRM and ERP systems
- Compatibility with standard data exchange formats (JSON, XML, etc.)
- Authentication and access control for secure data sharing

4.3. User Interface and Management

- Web-based user interface for remote management of Smart Energy Meters and Concentrators
- Real-time monitoring and control of Smart Energy Meters
- Configurable alarms and notifications
- Reporting and data export capabilities
-

5.0 Schematic

The principle of smart metering concept is as presented in figure 1.

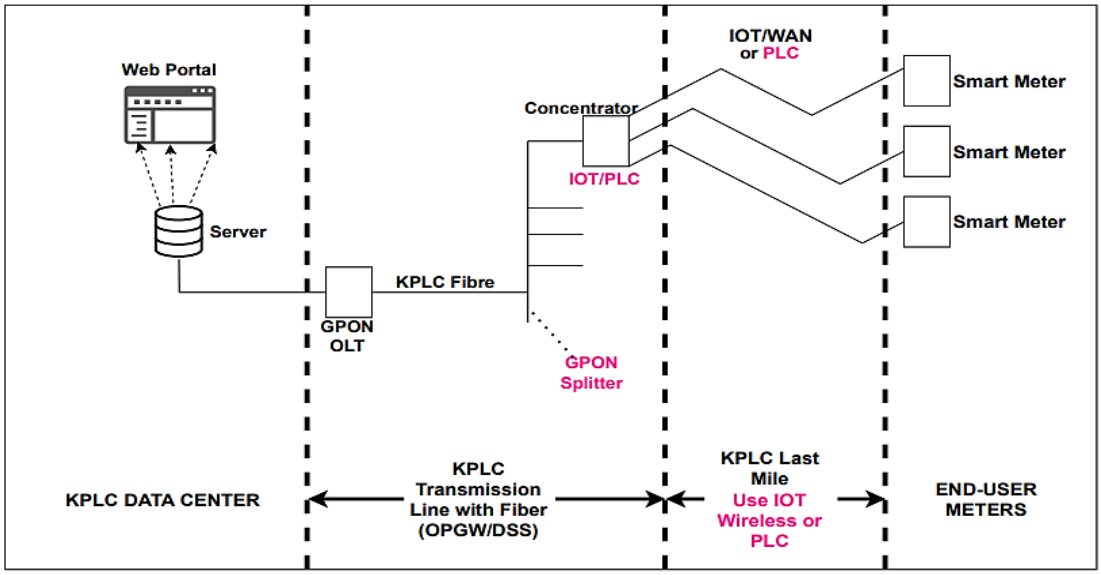

Figure 1: Architecture of Smart Energy Meters connectivity via Power Line Fiber

6.0 Environmental and Safety Requirements

6.1. Operating Conditions

- Operating temperature range: -25°C to +70°C
- Relative humidity: up to 95%, non-condensing
- IP rating: IP54 or higher for outdoor installations

6.2. Compliance with Standards and Regulations

- Compliant with relevant IEC, IEEE, and ITU-T standards
- Compliance with local safety and electromagnetic compatibility regulations
- RoHS and WEEE compliant for environmental safety

By adhering to these technical specifications, the Smart Energy Meters will provide an efficient, secure, and reliable solution for energy management that can be easily integrated into existing systems.